THE CORPORATION OF THE CITY OF SARNIA
People Serving People

ENGINEERING DEPARTMENT

OPEN SESSION REPORT

TO: Members of Sarnia City Council

FROM: Mike Berkvens, Director of Engineering

DATE: February 26, 2018

SUBJECT: 2018 Donohue Bridge Project Update

Recommendation:
For Council's Information

Background:
An information report was provided to Sarnia City Council on October 2, 2017 detailing rehabilitation activity throughout the lifespan of the Donohue Bridge. The Donohue Bridge was built in 1969 and underwent deck repairs in 1983 and again in 2010. Substructure repairs were conducted on the underside of the bridge in 2013 and 2017.

Staff are currently working with AMEC Foster Wheeler, the City's engineering consultant, in design and preparation of a construction tender that will see significant rehabilitation to the northbound deck and sub structure repairs. This is a very brief summary of the details provided in the October 2, 2017 report.

Comments:
This report is being provided to Sarnia City Council to accompany the attached drawing prepared by City staff. The drawing titled, Donohue Bridge Rehabilitation Progress – 2009 through 2018, was prepared to offer a visual understanding of the various bridge components that have received rehabilitation in past projects. It is also very helpful in understanding how significantly large a structure the Donohue Bridge is. The drawing is an isometric view looking down from the northwest above the bridge.

The various project years and components have been referenced by different colours. This is helpful in understanding how much of the bridge has been rehabilitated and even more helpful in understanding how much of the

bridge is original. For clarity, the girders and diaphragms were not shown on the drawing. Individual repairs to some substructure components were also not shown as they were too numerous and random to accurately portray.

In terms of size, the Donohue Bridge consists of ten spans crossing three separate corridors. It crosses over Campbell Street, the Point Edward rail spur, and CN's mainline rail to the USA. The height of the Donohue Bridge is required to clear the at-grade Point Edward rail spur. This in turn offers uninterrupted access to Industry in the Valley. To put the size of this bridge into perspective; the average bridge crossing the 402 is between two to four spans. The Christina Street overpass crossing the 402 is two spans and the 402 overpass crossing Modeland Road is four spans. Simply put, the Donohue Bridge is two and a half times bigger than a typical MTO concrete bridge.

Consultation:
Engineering Department staff were consulted on this report.

Financial Implications:
Currently, the 2018 phase of the Donohue Bridge Project design and tender is being finalized.

The 2018 Council-approved Capital Budget has allocated $6,000,000 towards the 2018 Phase of the Donohue Bridge Rehabilitation.

Reviewed by:	Approved by:
Mike Berkvens Director of Engineering	Margaret Misek-Evans Chief Administrative Officer

This report was prepared by Robert Williams, Construction Manager

Attachments: Drawing – Donohue Bridge Rehabilitation Progress – 2009 through 2018
Donohue Bridge Deck Section and Basic Components of a Bridge

Above: Column in need of repair. Deteriorated concrete cover and corroded reinforcing is visible in 2012.

Above: Typical Column Repair completed in 2013.

Magnitude of size of Structure

Columns repairs extremely close to CN Tracks which requires delays in work for passing trains

Basic Components of a Bridge

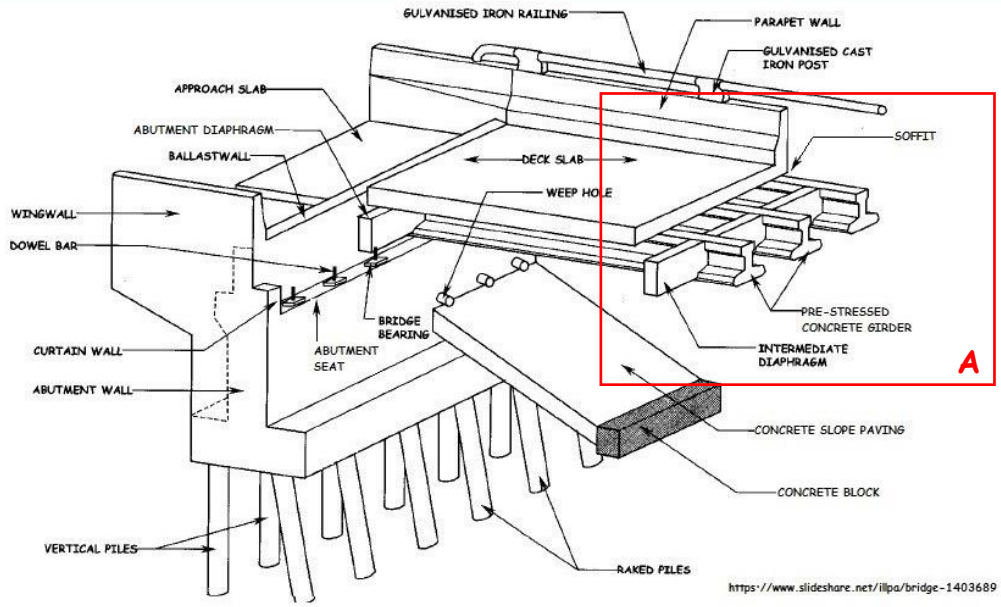

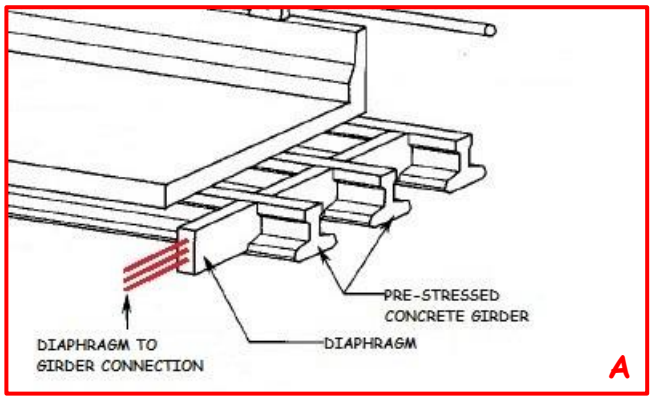

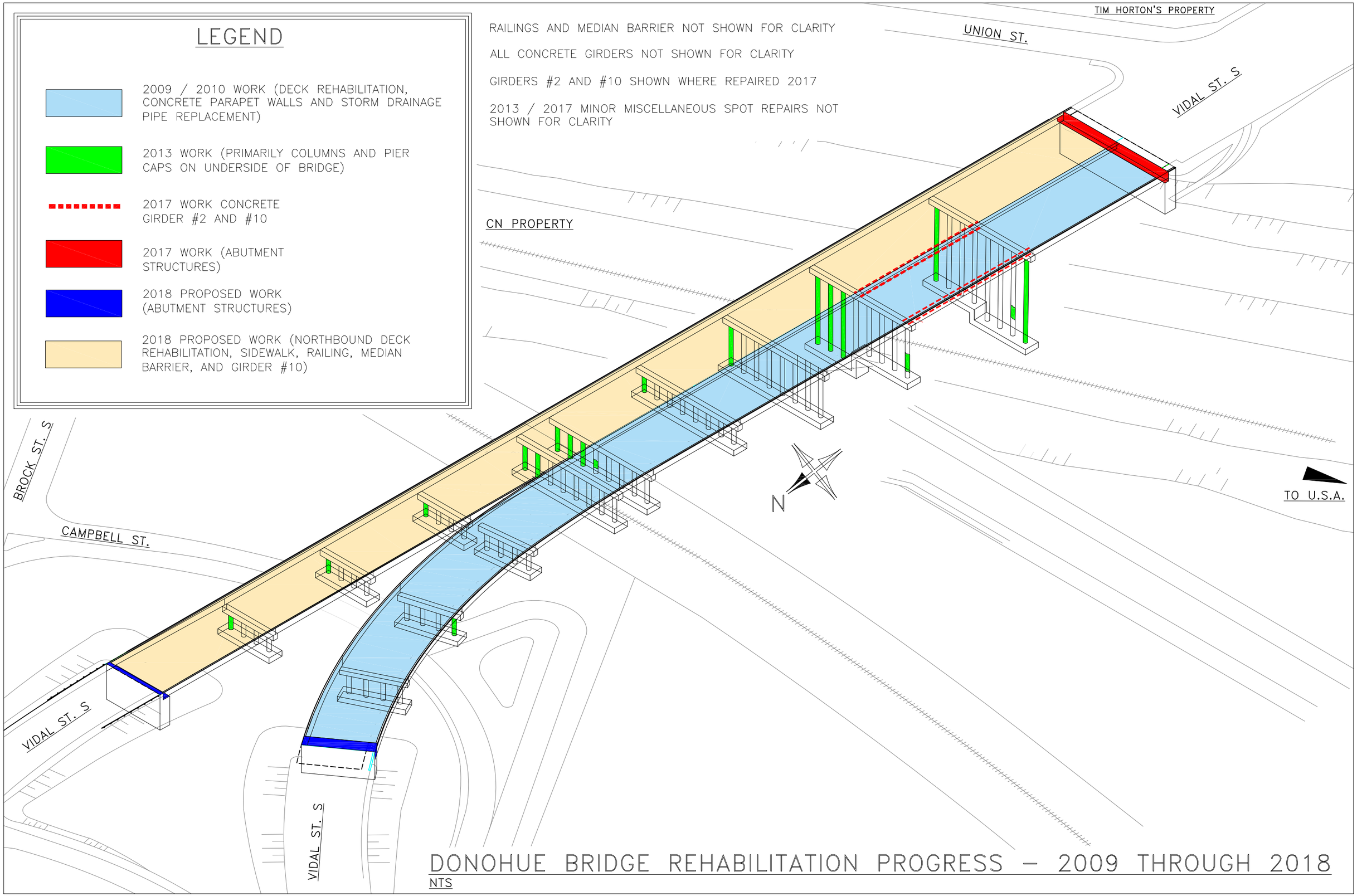

DONOHUE BRIDGE REHABILITATION PROGRESS – 2009 THROUGH 2018

NTS